PROLITE T1731SAW-B1

The ProLite T1731SAW uses highly accurate Surface Acoustic Wave Touch Technology (SAW) with a pure-glass scratch resistive front, offering superior image clarity and screen durability. The screen can be touched with a soft stylus, finger or gloved hand making it suitable for a number of applications, and the robust design and solid but flexible stand ensures resilience in the most demanding environment. Menu Buttons are located on the side of the screen which can be locked to prevent tampering, and include a handy function to deactivate the Touch Screen for cleaning. The iiyama Prolite T1731SAW Touch Screen is ideal for a wide range of applications including Point of Sale, Kiosks, Hospitality and Entertainment, Control rooms, Education, Training and many others.

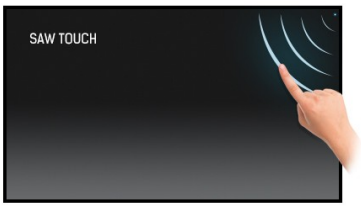

TOUCH TECHNOLOGY - SURFACE ACOUSTIC WAVE

Surface acoustic wave uses ultrasonic waves that pass over the panel. When the panel is touched, a portion of the wave is absorbed and a touch event is registered. Because the screen is covered with a glass layer this technology offers great picture performance (high contrast and colour accuracy). It is also scratch-resistant technology and therefore ideal for use in Public Places or Schools. Even if the screen is scratched, the touch function remains unaffected. Surface Acoustic Touch screens are activated with finger or a soft stylus touch.

IP54

The IP Code classifies how resistant a device is to foreign objects and moisture. IP54 means that the monitor will operate in dusty conditions, and will resist splashing water.

1. DISPLAY CHARACTERISTICS

DIAGONAL	17"; 43cm
ASPECT RATIO	5 : 4
PANEL	TN LED
NATIVE RESOLUTION	1280 x 1024 (1.3 megapixel)
BRIGHTNESS	250 cd/m² typical
BRIGHTNESS	230 cd/m² with touch panel
CONTRAST	1000 : 1 with touch panel
RESPONSE TIME	5 ms
VIEWING ZONE	horizontal/vertical: 170° / 160° ; right/left: 85° / 85° ; up/down: 80° / 80°
DISPLAY COLOUR	16.7 million
TOUCHTECHNOLOGY	surface acoustic wave
TOUCH POINTS	Yes
GLASS HARDNESS	8H minimum
LIGHT TRANSMITTANCE	92%
DISPLAY AREA H X W	270 x 338 mm; 10.6" x 13.3"
PIXEL PITCH H X V	0.264 x 0.264 mm
HORIZONTAL SYNC	31.5 - 80 KHz
VERTICAL SYNC	56 - 75 Hz
SYNCHRONIZATION	Separate Sync

2. INTERFACES CONNECTORS

ANALOG INPUT CONNECTOR	VGA
DIGITAL INPUT CONNECTOR	DVI
CONTROLS	RS232C, USB (touch)
INPUTS	USB, RS232C

3. SPECIAL FEATURES

APPLE - MAC	OS9, OSX
PLUG & PLAY	VESA DDC 2B™
CONTROLS	On-Screen-Display in 8 languages (DE, EN, ES, FR, IT, JP, Chinese - traditional and simplified) and 5 front controls (Menu, Scroll up/ Brightness, Scroll down/ Mute, Select/ Auto, Power)
USER CONTROLS	contrast, brightness, auto adjust, H.position, V.position, H.size, phase, OSD H.position, OSD V.position, OSD timeout, reset, input select, OSD language, colour temperature, volume, mute
SPEAKERS	2 x 1 W (Stereo)
ANTI-THEFT-DEVICE	Kensington-lock™ prepared
SAFETY	CE, CB, TÜV-Bauart, Gost-R, VCCI
TILT ANGLE	90° up; 5° down
VESA MOUNTING	100 x 100 mm

WATER AND DUST PROTECTION	IP54

4. ACCESSORIES

DRIVER	Windows (10, 8.1, 8, 7, Vista, XP, 9X, 2000, CE, NT4), Linux, Mac (OSX, OS9), DOS
INCLUDED ACCESSORIES	power cable, VGA signal cable, DVI signal cable, RS232C signal cable, audio cable, USB cable, Touch Panel Driver Disk (CD-ROM), screw, quick start guide

5. POWER MANAGEMENT

POWER SUPPLY	AC 100 - 240 V, 50 / 60 Hz
POWER SUPPLY UNIT	internal
POWER USAGE	20 W typical; max. 3 W in Power management mode
POWER MANAGEMENT	VESA DPMS

6. DIMENSIONS & WEIGHT

DIMENSIONS W X H X D	387 x 342 x 201 mm
WEIGHT	5.8 kg

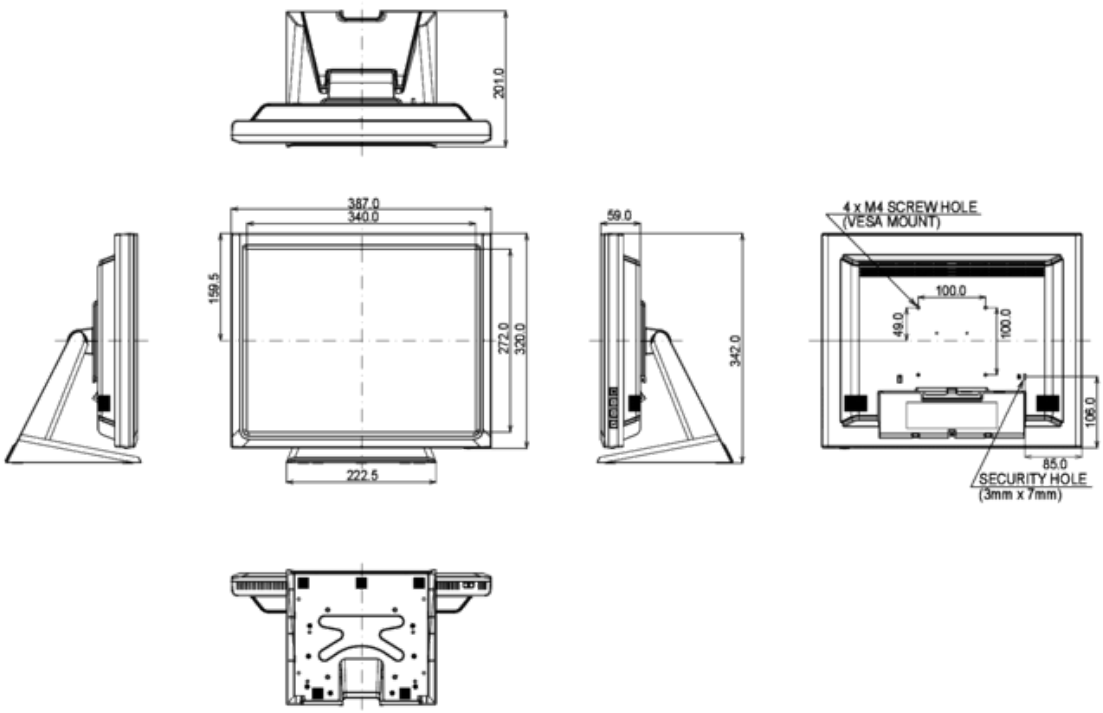

All trademarks and registered trademarks acknowledged. E & O E. Specification subject to change without notice. All LCD's comply with ISO-9241-307:2008 in connection with pixel defects.

© IIYAMA CORPORATION ( ). ALL RIGHTS RESERVED.