24" IPS 3-side borderless monitor for multi-monitor set-ups

Stylish edge-to-edge design makes the ProLite XU2493HS perfect for multi-monitor set-ups. The IPS panel technology offers accurate and consistent colour reproduction with wide viewing angles. High contrast and brightness values mean the monitor will provide excellent performance for photographic and web design.

Available also with height adjustable stand : ProLite XUB2493HS-B6

IPS Technology

IPS technology offers higher contrast, darker blacks and much better viewing angles than standard TN technology. The screen will look good no matter what angle you look at it.

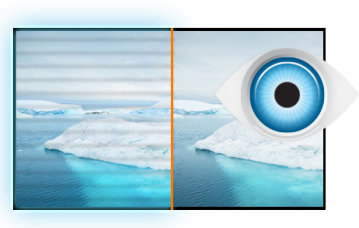

Flicker-free + Blue light

The ultimate solution for the comfort and health of your eyes. Flicker-free monitors with the blue light reducer function substantially reduce the strain and fatigue caused by flickering and blue light emittance of regular monitors.

01 DISPLAY CHARACTERISTICS

Design	3-side borderless
Diagonal	23.8", 60.5cm
Panel	IPS panel technology LED, matte finish
Native resolution	1920 x 1080 @75Hz (2.1 megapixel Full HD)
Aspect ratio	16:9
Panel brightness	250 cd/m²
Static contrast	1000:1
Advanced contrast	80M:1
Response time (GTG)	4ms
Viewing zone	horizontal/vertical: 178°/178°, right/left: 89°/89°, up/down: 89°/89°
Colour support	16.7mln (sRGB: 96%; NTSC: 72%)
Horizontal Sync	30 - 83kHz
Viewable area W x H	527 x 296.5mm, 20.7 x 11.7"
Pixel pitch	0.275mm
Colour	matte, black

02 INTERFACES / CONNECTORS / CONTROLS

Signal input	HDMI x1 DisplayPort x1
HDCP	yes
Headphone connector	yes

03 FEATURES

Blue light reducer	yes
Flicker free	yes
Adaptive Sync support	yes
Extra	i-style Colour
OSD languages	EN, DE, FR, IT, RU, JP, CZ, NL, PL
Control buttons	Power, Menu, + / Volume, - / Eco, Signal/ Exit
User controls	picture adjust (brightness, contrast, i-Style colour, ACR, Eco, OD, X-res technology), colour settings (gamma, RGB range, colour temp.), image settings (video mode adjust, BLR, sharp and soft), OSD (OSD H. Position, OSD V. Position, OSD time, OSD background, OSD Rotate, language), extra (reset, DDC /CI, signal select, LED, opening logo, Adaptive Sync, display information)
Speakers	2 x 2W
Convenience	Kensington-lock™ prepared, DDC/CI, DDC2B, Mac OSX

04 MECHANICAL

Display position adjustments	tilt
Tilt angle	23° up; 5° down
VESA mounting	100 x 100mm

05 ACCESSORIES INCLUDED

Cables	power, HDMI
Other	quick start guide, safety guide

06 POWER MANAGEMENT

Power supply unit	internal
Power supply	AC 100 - 240V, 50/60Hz
Power usage	15W typical, 0.5W stand by, 0.3W off mode

07 SUSTAINABILITY

Regulations	CE, TÜV-Bauart, EAC, VCCI-B, PSE, RoHS support, ErP, WEEE, REACH, UKCA
Energy efficiency class (Regulation (EU) 2017/1369)	D
REACH SVHC	above 0.1%: Lead

08 DIMENSIONS / WEIGHT

Product dimensions W x H x D	539.5 x 393.5 x .211mm
Box dimensions W x H x D	607 x 401 x 127mm
Weight (without box)	3.5kg
Weight (with box)	5.2kg
EAN code	4948570121151

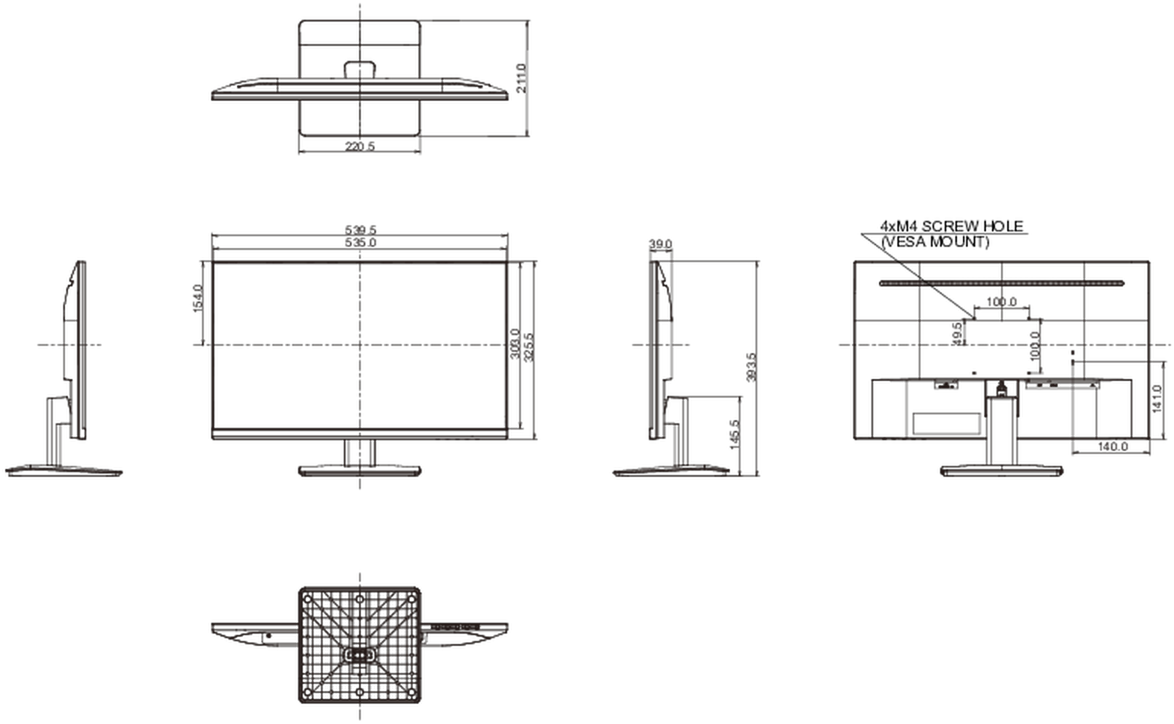

All trademarks and registered trademarks acknowledged. E & O E. Specification subject to change without notice. All LCD's comply with ISO-9241-307:2008 in connection with pixel defects.

© IIYAMA CORPORATION. ALL RIGHTS RESERVED