50” Professional Digital Signage display with 24/7, 4K UHD and 700cd/m² high brightness performance

This high brightness display will deliver dynamic and sharp content, designed to entice and captivate your audience. The slim bezel and true commercial display with a 4K UHD resolution (3840x2160), 700cd/m^2 and a contrast ratio of 4000:1 provides vibrant, detailed and sublime images. Thanks to on-board Android 9.0 you can easily customize the display by installing applications directly to it and makes it the perfect choice for Digital Signage, In-store communication and messaging.

Designed to perform in continual, around the clock environments, the LH5070UHB can be installed and utilised in landscape and portrait orientation. The jaw dropping and best-in-class 30mm total depth (when used with the included proprietary brackets) will mean this display can be installed discreetly and elegantly in all areas.

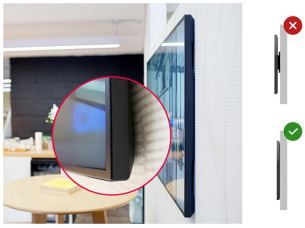

Zero-Gap Wall Mount

Style commercial interiors with Ultra Slim line displays and portray them like smart artwork, using the included Zero-Gap wall mount brackets.

Ultra Slim

With 50 percent depth saving over similar models, the jaw-dropping and best in class 30mm total depth display can be installed discretely and elegantly in all areas.

01 DISPLAY CHARACTERISTICS

Design	Thin bezel
Diagonal	49.5", 125.7cm
Panel	VA, haze 2%
Native resolution	3840 x 2160 @60Hz (8.3 MegaPixels 4K UHD)
Aspect ratio	16:9
Panel brightness	700 cd/m²
Static contrast	4000:1
Response time (GTG)	8ms
Viewing zone	horizontal/vertical: 178°/178°, right/left: 89°/89°, up/down: 89°/89°
Colour support	1.07B 10bit (8bit + Hi-FRC)
Horizontal Sync	28 - 135kHz
Viewable area W x H	1095.8 x 616.4mm, 43.1 x 24.3"
Bezel width (sides, top, bottom)	11mm, 11mm, 11mm
Pixel pitch	0.285mm
Bezel colour and finish	black, matte

02 INTERFACES / CONNECTORS / CONTROLS

Digital signal input	HDMI x2 (v.2.0, max. 3840x2160 @60Hz)
Monitor control input	RS-232c x1 (2.5mm mini jack) RJ45 (LAN) x1 IR x1 (3.5mm stereo mini)
Audio output	Mini jack x1 (3.5mm - stereo)
HDCP	v.2.3
USB ports	x2 (v.2.0)

03 FEATURES

Integrated software	Android OS 9.0 (Full HD), iiWare
Hardware	CPU: A53*2, quad core 1.5G, GPU: Mali G51 MP2, Memory: 3GB DDR4, Storage:32GB eMMC
Max. non-stop operating time	24/7
Anti image retention	yes
Media playback	yes
Housing (bezel)	metal

04 GENERAL

OSD languages	EN, DE, FR, ES, IT, CN, RU, JP, CZ, NL, PL
Control buttons	Power
User controls	picture (picture mode, contrast, brightness, hue, sharpness, saturation, black level, colour temp., aspect ratio, gamma selection), sound (balance, treble, bass), setting (OSD off timer, colour range, orientation, CEC options, wake on LAN, auto wake up, boot on source, logo on/off, HDMI version, IR/keypad lock, language, power saving, recovery from power off, restore to default), time (date, current time, scheduler), information (iiWare version, FW version, release date, current resolution, IP address, Wi-Fi MAC address, MAC address, internal thermal temp.)
Plug&Play	DDC2B

05 MECHANICAL

Orientation	landscape, portrait
Fanless design	yes
VESA mounting	400 x 400mm
Operation temperature range	0°C - 40°C
Storage temperature range	- 20°C - 60°C
MTBF	50.000 hours (excluding backlight)

06 ACCESSORIES INCLUDED

Cables	power, USB, HDMI, RS-232c, IR-Extender
Guides	quick start guide, safety guide
Other	Wall mounting brackets, Stickers for screw holes, Adhesive clips for cable management
Remote control	yes (batteries included)

07 POWER MANAGEMENT

Power supply unit	external
Power supply	DC 24 V
Power usage	95W typical, 0.5W stand by, 0.3W off mode

08 SUSTAINABILITY

Regulations	CE, TÜV-Bauart, RoHS support, ErP, WEEE, REACH, UKCA
Energy efficiency class (Regulation (EU) 2017/1369)	G

09 DIMENSIONS / WEIGHT

Product dimensions W x H x D	1122.2. x 643 x 30mm
Box dimensions W x H x D	1265 x 774 x 163mm
Weight (without box)	16kg
Weight (with box)	20.3kg
EAN code	4948570120505

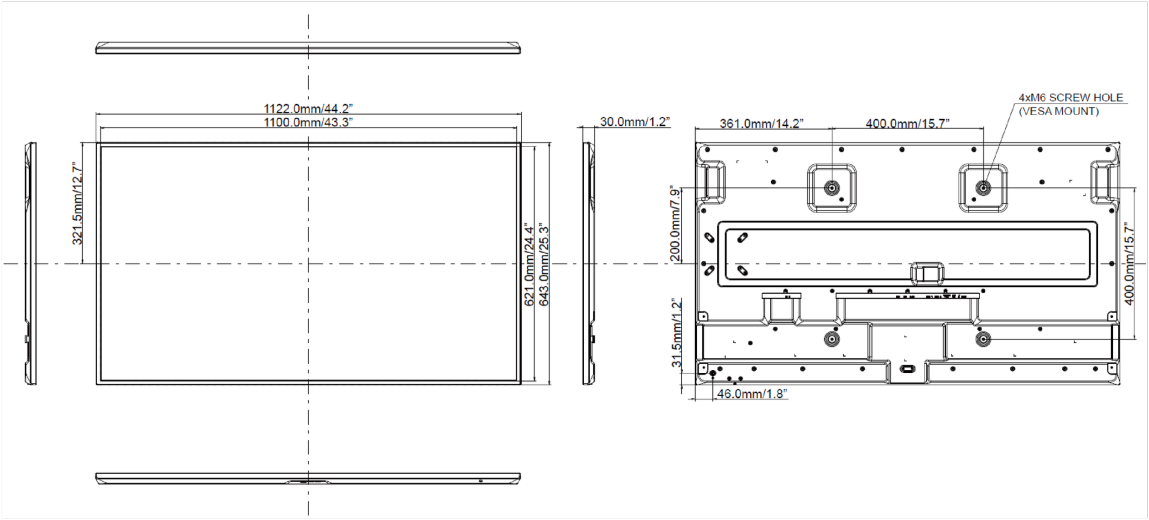

All trademarks and registered trademarks acknowledged. E & O E. Specification subject to change without notice. All LCD's comply with ISO-9241-307:2008 in connection with pixel defects.

© IIYAMA CORPORATION. ALL RIGHTS RESERVED