Mounting kit for built-in equipment

This solution is compatible for the following iiyama models: TF1015MC,TF1515MC,TF2415MC.

01 TECHNICAL SPECIFICATION

Type	mounitng bracket

■ **ProLite TF1015MC**

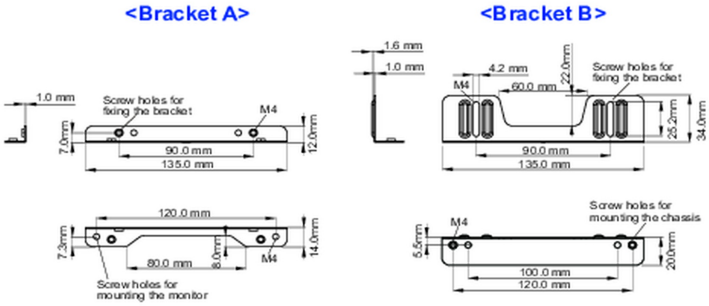

■ **ProLite TF1515MC / ProLite TF2415MC**

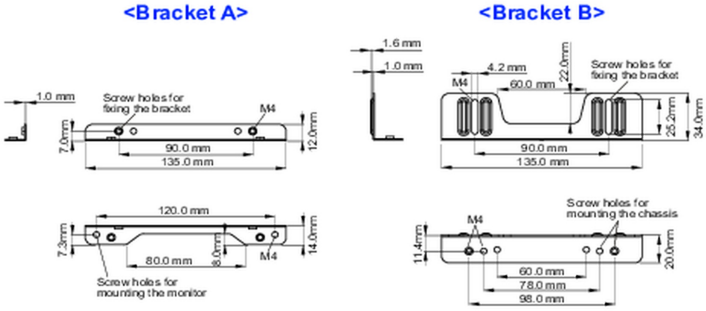

02 DIMENSIONS / WEIGHT

EAN code	4948570032525

■ **ProLite TF1015MC**

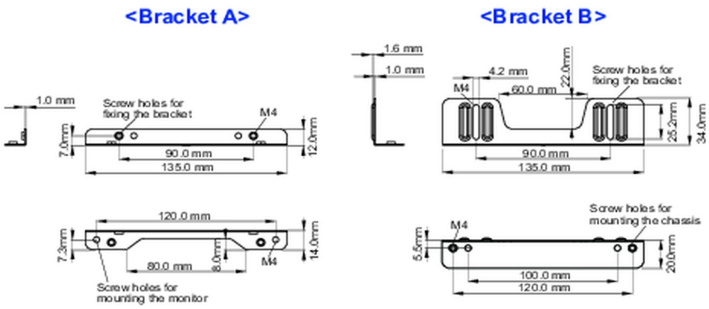

■ **ProLite TF1515MC / ProLite TF2415MC**

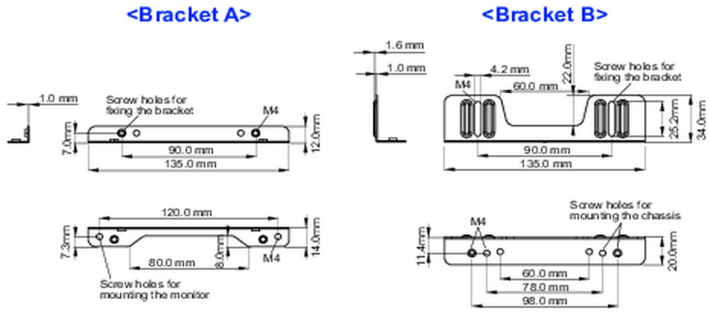

All trademarks and registered trademarks acknowledged. E & O E. Specification subject to change without notice. All LCD's comply with ISO-9241-307:2008 in connection with pixel defects.

© IIYAMA CORPORATION. ALL RIGHTS RESERVED