22” monitor with IPS panel and ultra flat front

ProLite XU2290HS is a 22” LED backlit LCD Screen featuring IPS Panel technology which is considered to be the best all round panel type. It offers accurate and consistent colour reproduction with wide viewing angles (178°/178°) and fast response time. XU2290HS is full HD, has a >5mln:1 Advanced Contrast Ratio and 250 cd/m² brightness offering the user a clear and vivid image. The ProLite XU2290HS will provide excellent performance for photographic design, web design, standard office use and in multi-monitor environment. Very suitable for multi-monitor Digtal Signage and office applications.

IPS

IPS displays are best known for wide viewing angles and natural, highly accurate colours. They are especially suited for colour-critical applications.

OverDrive ON / OFF

When very fast graphics are displayed your monitor can sometimes get blurry. Turning on the OverDrive feature will eliminate that.

01 DISPLAY CHARACTERISTICS

Design	ultra slim
Diagonal	21.5", 54.7cm
Panel	AH-IPS LED, matte finish
Native resolution	1920 x 1080 (2.1 megapixel Full HD)
Aspect ratio	16:9
Panel brightness	250 cd/m²
Static contrast	1000:1
Advanced contrast	5M:1
Response time (GTG)	4ms
Viewing zone	horizontal/vertical: 178°/178°, right/left: 89°/89°, up/down: 89°/89°
Colour support	16.7mln (sRGB: 99%; NTSC: 72%)
Horizontal Sync	24 - 80kHz
Viewable area W x H	476.1 x 267.8mm, 18.7 x 10.5"
Pixel pitch	0.248mm
Colour	matte

02 INTERFACES / CONNECTORS / CONTROLS

Signal input	VGA x1 DVI x1 HDMI x1
HDCP	yes

03 FEATURES

Blue light reducer	yes
OSD languages	EN, DE, FR, RU, JP, PL
Control buttons	Power, Menu, +/ Volume, -/ ECO, Auto
User controls	luminance (contrast, brightness, i-style Colour, ACR, ECO), image steup (clock, phase, H. position, V. position, aspect), colour (gamma, colour temp.), OSD setup (H. position, V. position, OSD time out, language), extra (reset, DDC/CI, input select, OD, HDMI audio, opening logo, information), volume, auto adjust
Speakers	2 x 2W
Convenience	Kensington-lock™ prepared, DDC/CI, DDC2B, Mac OSX

04 MECHANICAL

Display position adjustments	tilt
Tilt angle	20° up; 4° down
VESA mounting	100 x 100mm

05 ACCESSORIES INCLUDED

Cables	power, DVI, Audio
Other	quick start guide, safety guide

06 POWER MANAGEMENT

Power supply unit	internal

Power supply	AC 100 - 240V, 50/60Hz
Power usage	22W typical, 0.5W stand by, 0.5W off mode

07 SUSTAINABILITY

Regulations	CE, TÜV-Bauart, VCCI-B, RoHS support, ErP, ENERGY STAR ®, WEEE, CU, REACH
EPEAT Silver	EPEAT is a comprehensive environmental rating that helps identify greener computers and other electronic equipment. The Silver certification means the monitor meets all required criteria plus at least 50% of the optional requirements. EPEAT Silver is valid in countries where iiyama registers the product. Please visit www.epeat.net for the registration status in your country.
REACH SVHC	above 0.1%: Lead

08 DIMENSIONS / WEIGHT

Product dimensions W x H x D	499.5 x 370.5 x 180mm
Weight (without box)	3.7kg
EAN code	4948570112975

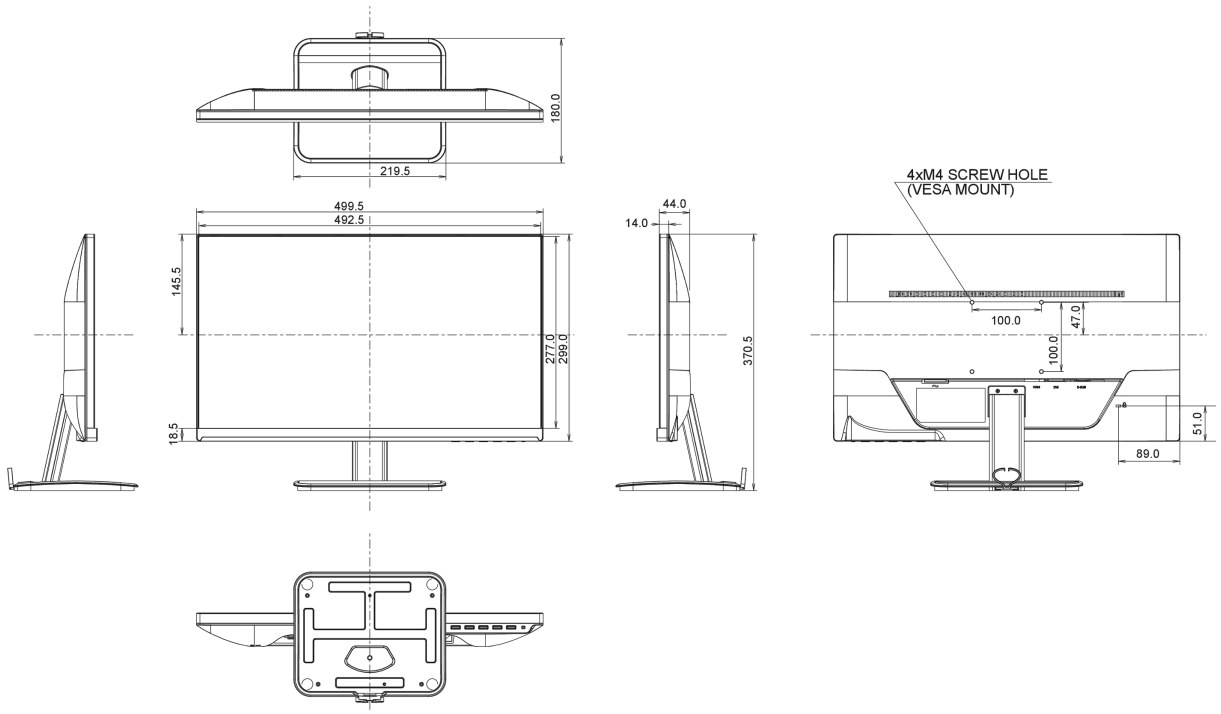

All trademarks and registered trademarks acknowledged. E & O E. Specification subject to change without notice. All LCD's comply with ISO-9241-307:2008 in connection with pixel defects.

© IIYAMA CORPORATION. ALL RIGHTS RESERVED