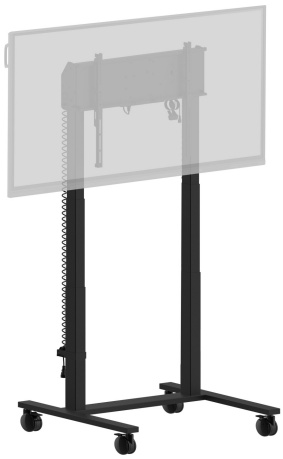

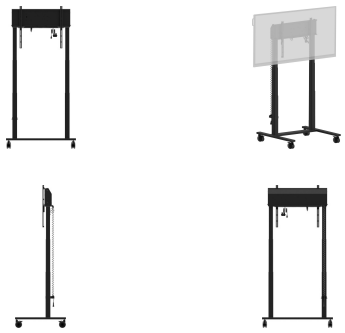

Double column electric floor lift on wheels for monitors up to 98" (up to 105" with a mounting kit)

An anti-collision electric trolley for large format displays up to VESA 800x600mm. This product is unique because of its screen flexibility and installation ease, within just five steps the product is installed and ready for use in any meeting area.

This mobile stand with electrical 950mm height adjustment provides a continuous and silent adjustment, controlled directly from a compatible iiyama TE SERIES display or with the attached control pad. The 4-inch muting castor omni directional wheels make it easy and save to move the car around. The integrated screen bracket supports most VESA patterns, making this floor lift suitable for every display up to 98” with a max. weight of 120kg.

*To mount a 105" display you need the additional mounting kit MD-ADAP001

01 TECHNICAL SPECIFICATION

Type	Black, 1.8m
Number of screens	1
Screen size	55" - 105"
Height adjustment	950mm, Centre of the screen is 850 - 1800mm
Max weight capacity	120kg / монитор
VESA maximum	800 x 600mm
Extra	For screens up to 98" (105" needs additional mounting kit - MD-ADAP001), cable management, customized cables (Power, USB, Control pad)

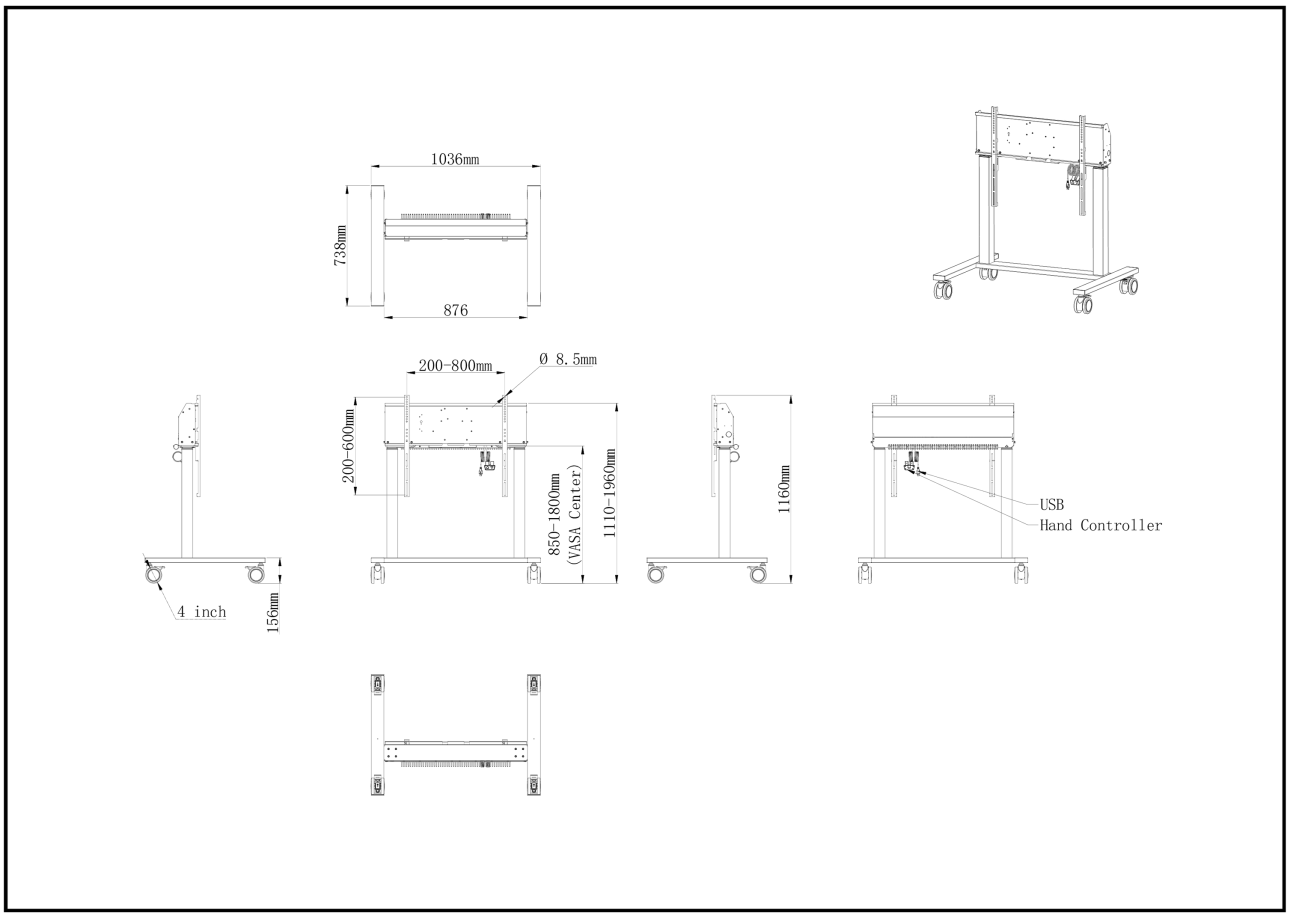

02 РАЗМЕР / ВЕС

Размер продукта Ш x В x Г	1036 x 850 to 1800 x 738мм
Размер коробки Ш x В x Г	1132 x 182 x 754мм
Вес (без упаковки)	40.9кг
Вес (с упаковкой)	43.5кг
EAN код	4948570033270

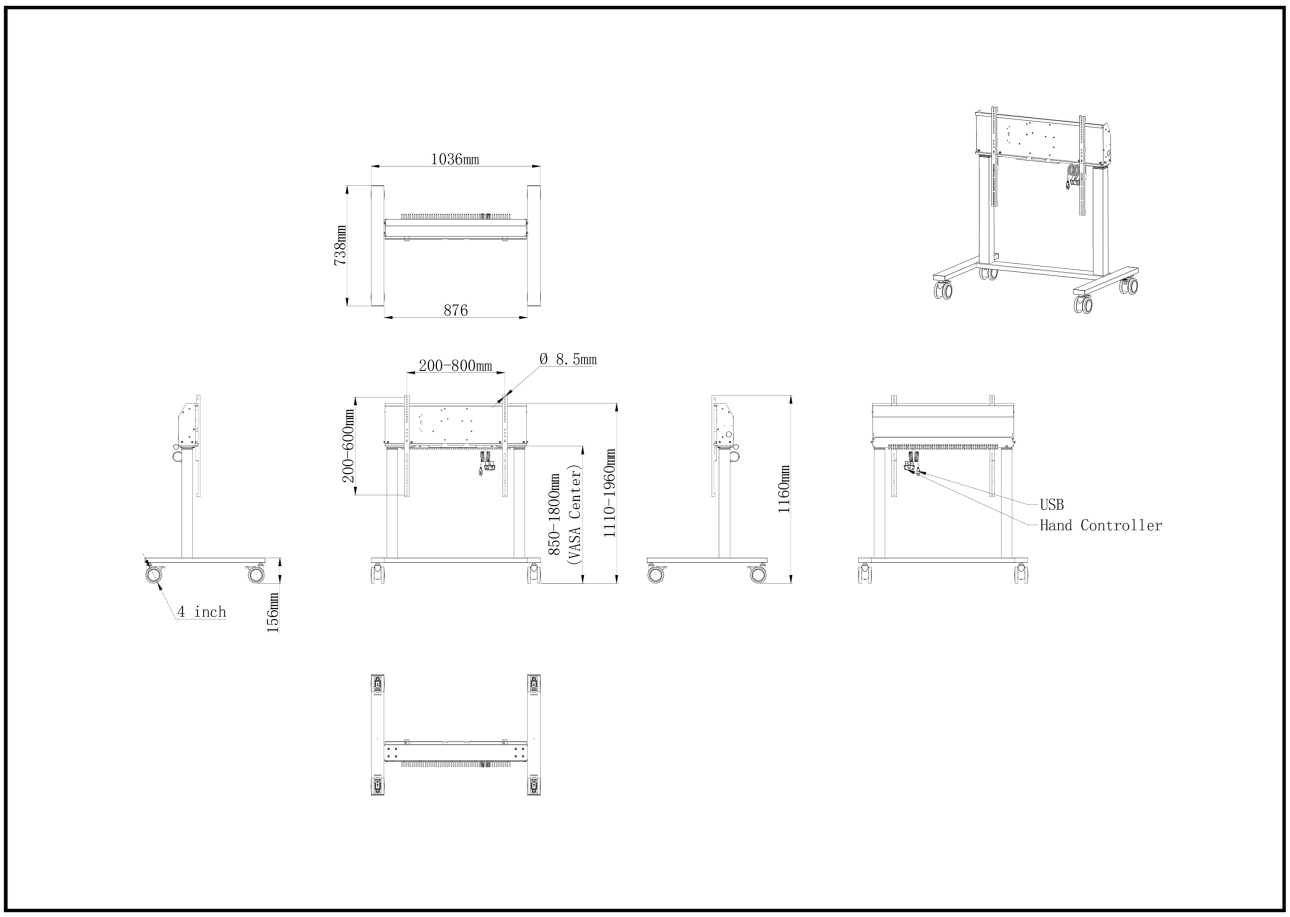

03 СОПУТСТВУЮЩАЯ ИНФОРМАЦИЯ

Сопутствующие товары	MD CAR2011-B1

Все товарные знаки и торговые марки являются собственностью их владельцев и они защищены. Ошибки и изменения допускаются. Спецификации могут быть изменены без уведомления. Все LCD мониторы соответствуют стандарту ISO-9241-307:2008 по политике битых пикселов.

© IIYAMA CORPORATION. ALL RIGHTS RESERVED