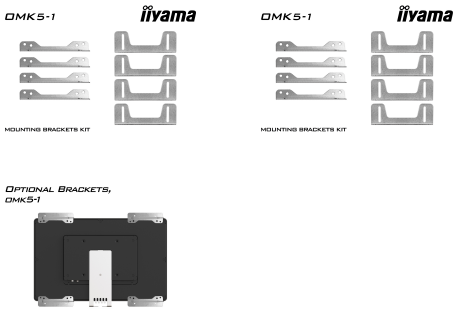

Mounting brackets kit for iiyama TF1615MC open frame touchscreens

This solution is compatible for the following iiyama model: TF1615MC

01 TECHNICAL SPECIFICATION

Type	mounting bracket

● **Bracket dimensions**

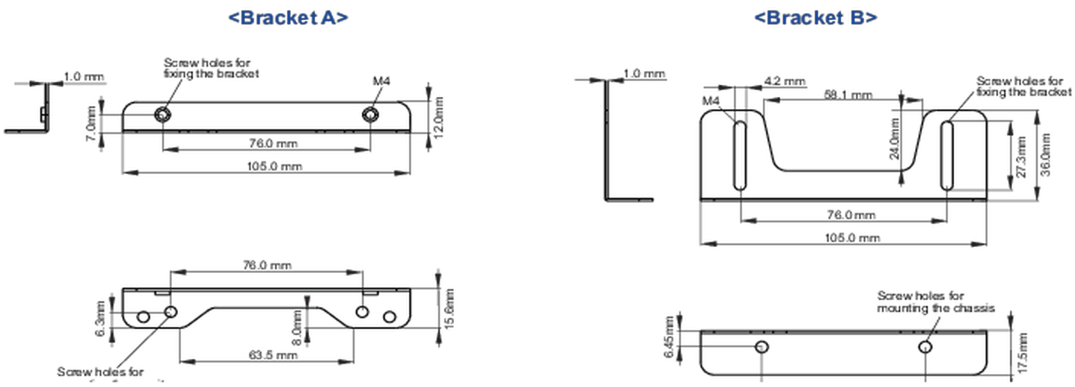

02 DIMENSIONS / WEIGHT

EAN code	4948570033164

● **Bracket dimensions**

<Bracket A>

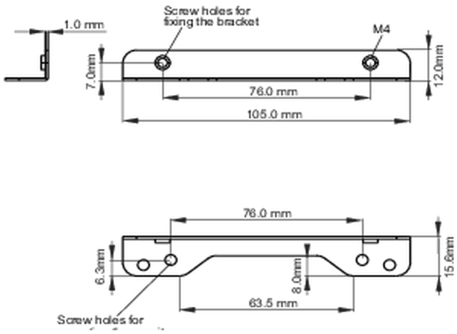

<Bracket B>

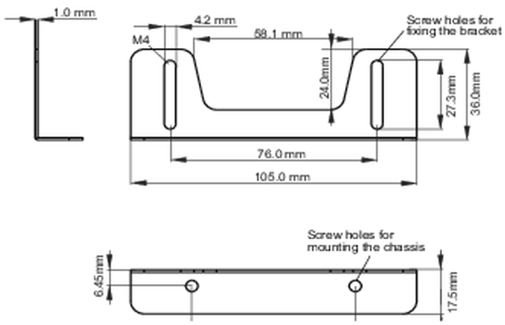

03 RELATED INFORMATION

Related products	ProLite TF1615MC-B1

All trademarks and registered trademarks acknowledged. E & O E. Specification subject to change without notice. All LCD's comply with ISO-9241-307:2008 in connection with pixel defects.

© IIYAMA CORPORATION. ALL RIGHTS RESERVED