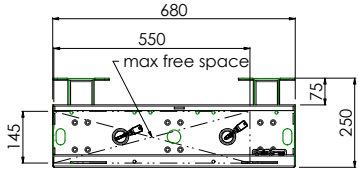
680
550
max free space
75
250
145

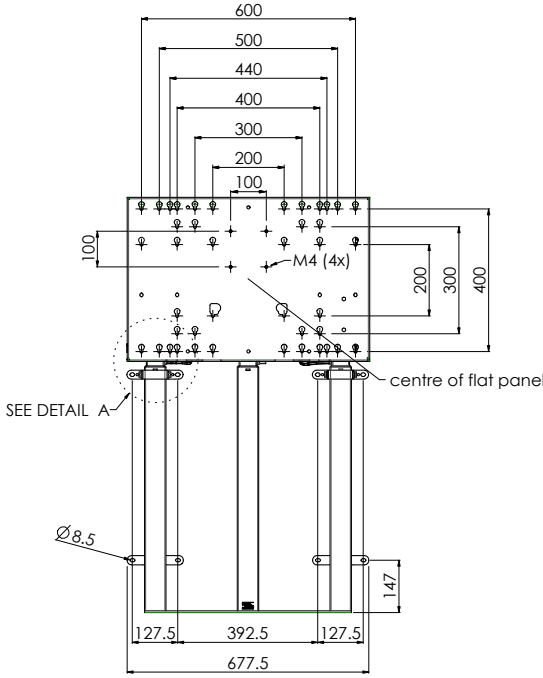
600
500
440
400
300
200
100
100
M4 (4x)
200
300
400
centre of flat panel
SEE DETAIL A
Ø8.5
147
127.5
392.5
127.5
677.5

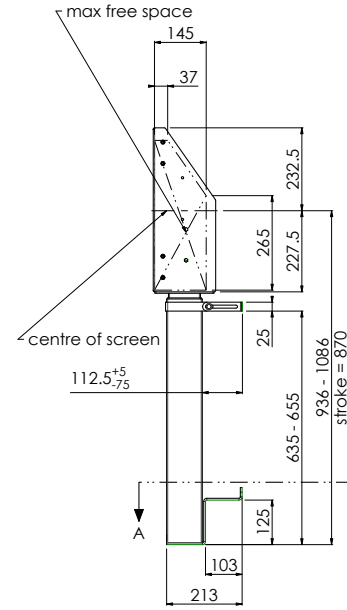
max free space
145
37
232.5
265
227.5
centre of screen
25
112.5+5 -75
936 - 1086
stroke = 870
635 - 655
A
125
A
103
213

SECTION A-A

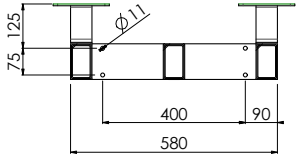
125
75
Ø11
400
90
580