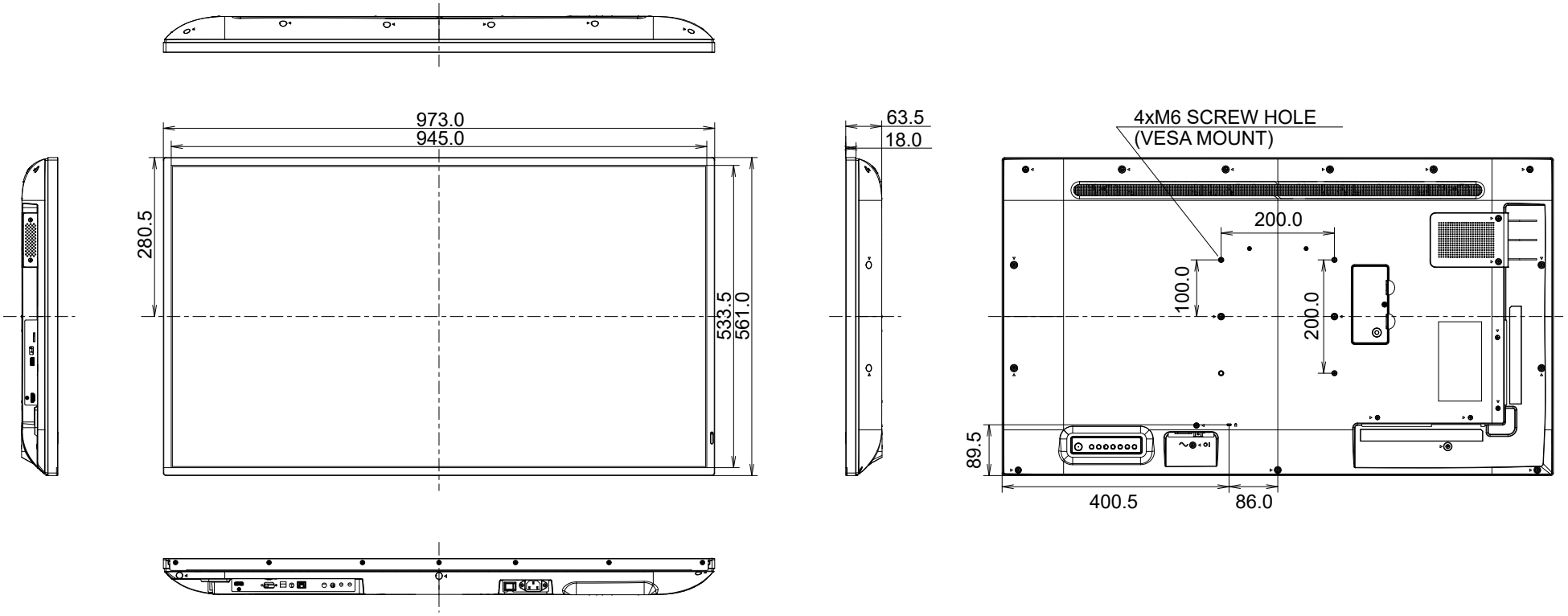
973.0
945.0
280.5
533.5
561.0
63.5
18.0
4xM6 SCREW HOLE
(VESA MOUNT)
200.0
100.0
200.0
89.5
400.5
86.0