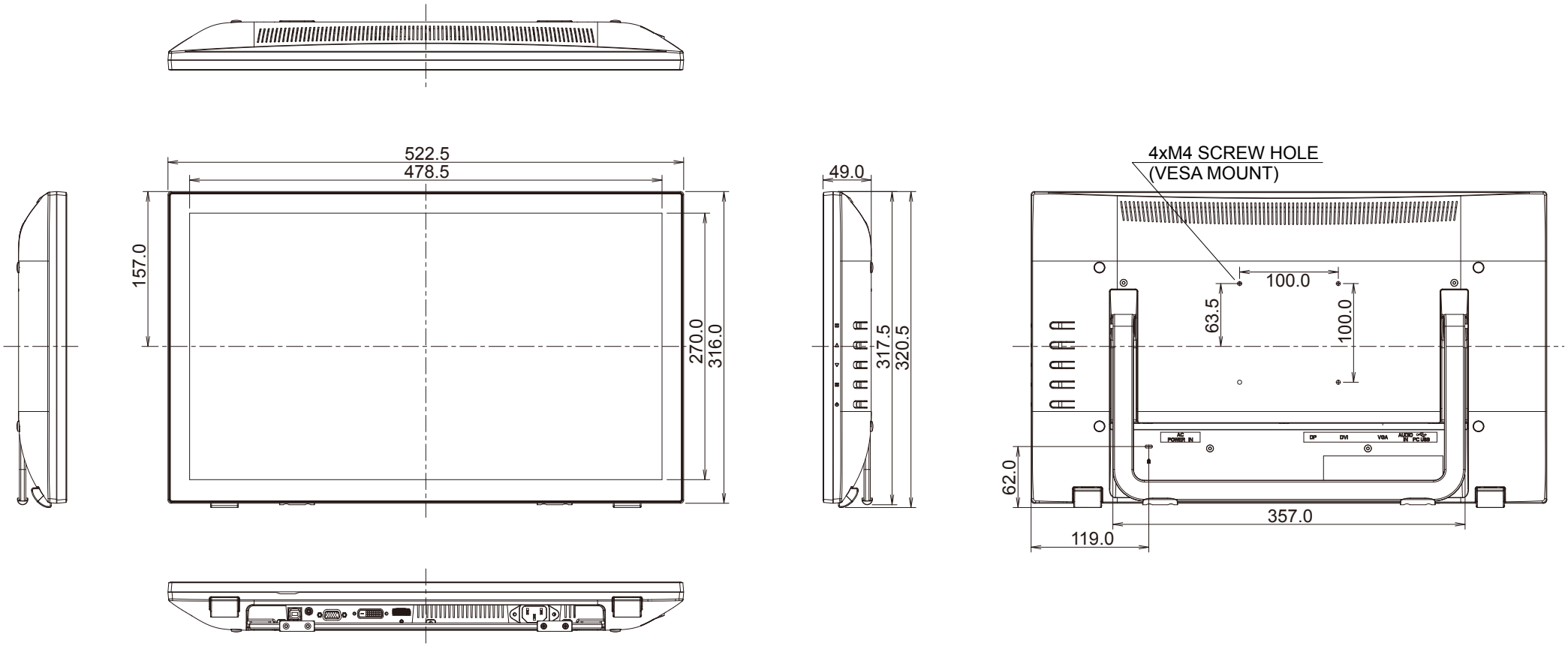
522.5
478.5
157.0
270.0
316.0
49.0
317.5
320.5
4xM4 SCREW HOLE
(VESA MOUNT)
100.0
63.5
100.0
62.0
357.0
119.0
AC
POWER IN
DP
DVI
VGA
AUDIO
IN
PC USB