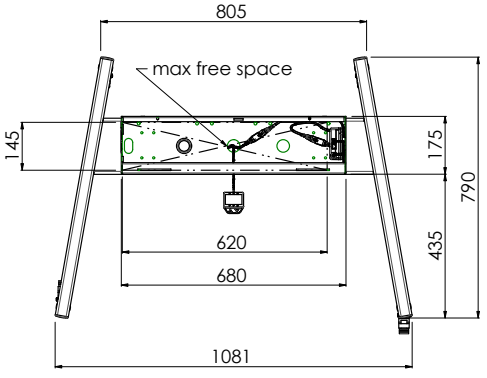
805
max free space
145
175
790
620
680
435
1081

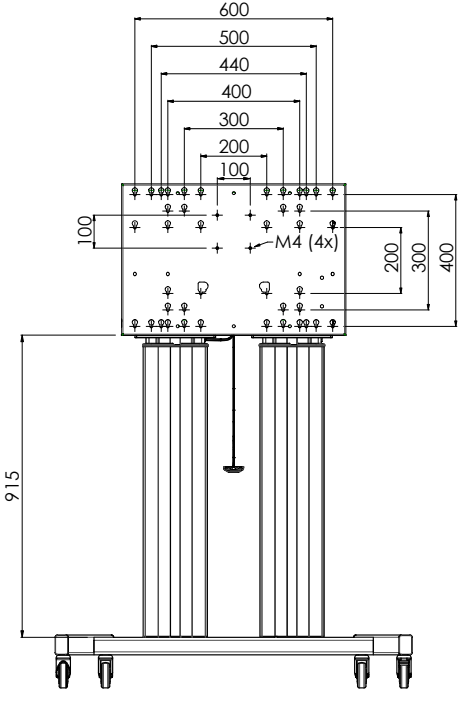
600
500
440
400
300
200
100
100
M4 (4x)
200
300
400
915

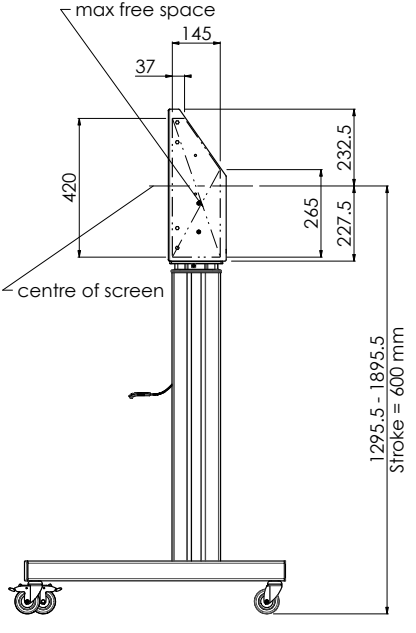
max free space
145
37
232.5
420
265
227.5
centre of screen
1295.5 - 1895.5
Stroke = 600 mm