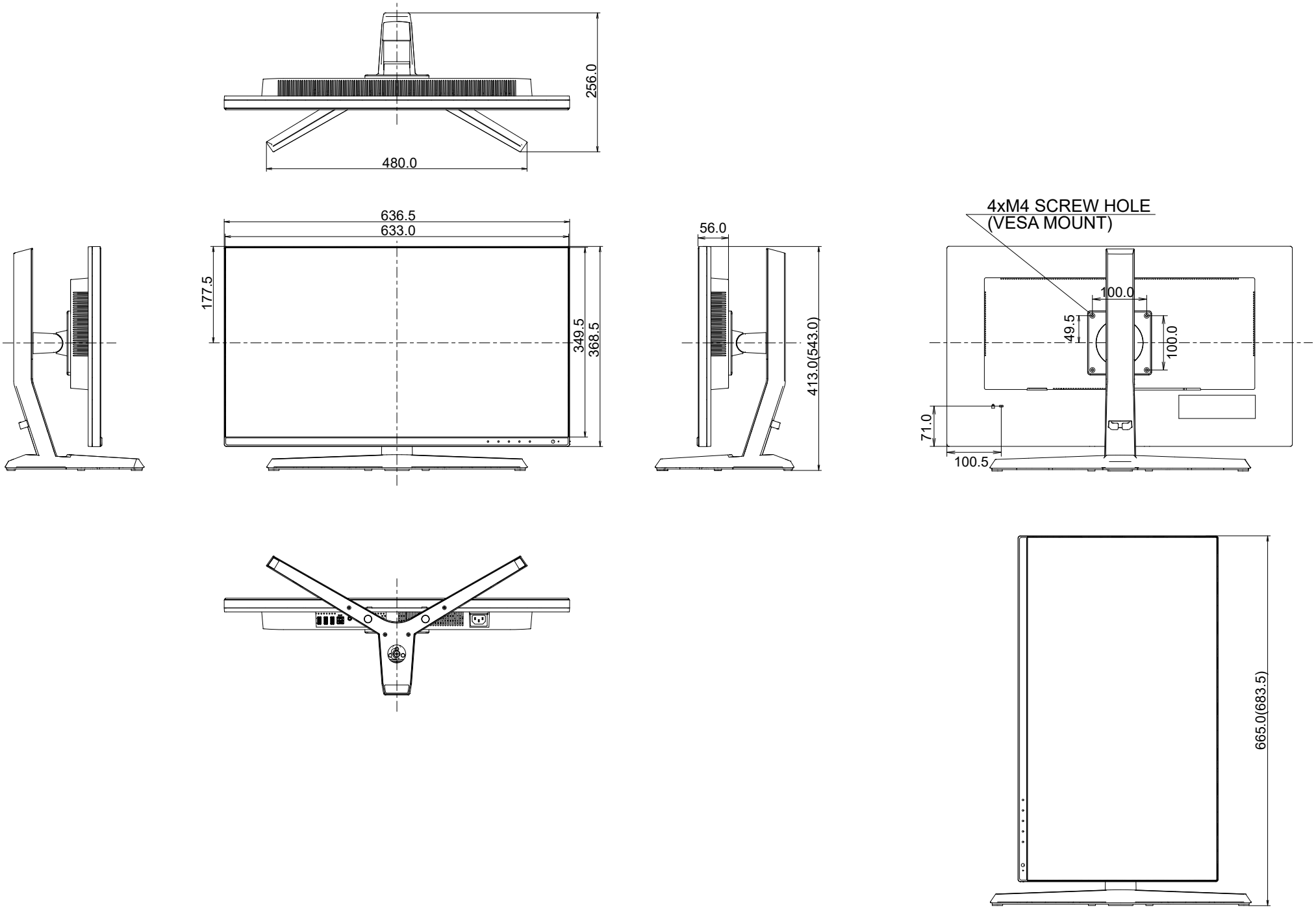
256.0
480.0
636.5
633.0
177.5
349.5
368.5
56.0
413.0(543.0)
4xM4 SCREW HOLE
(VESA MOUNT)
100.0
49.5
100.0
71.0
100.5
665.0(683.5)